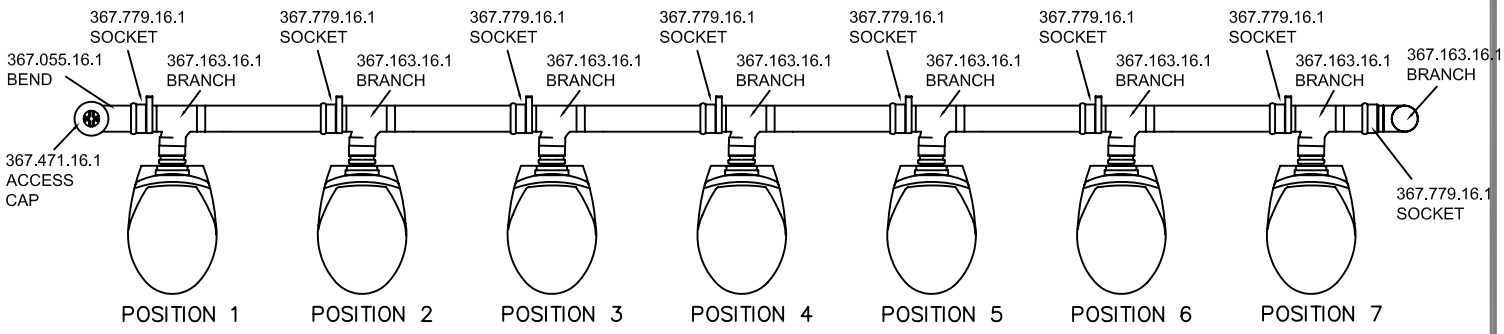

EXPLODED SECTION THRO. FLOAT

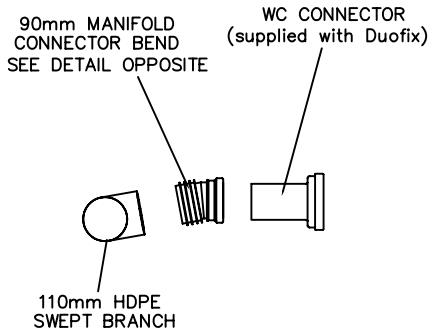

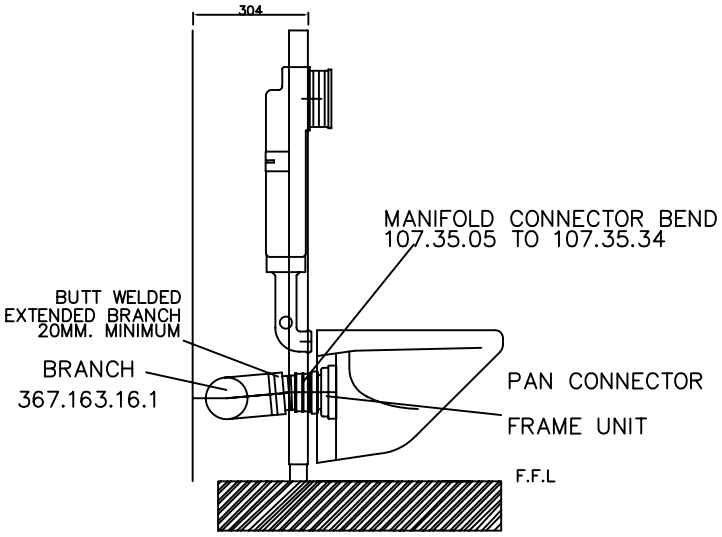

HDPE SOIL FLOAT
USING MANIFOLD BENDS

90mm MANIFOLD CONNECTING BENDS
FOR DUOFIX WC ELEMENTS

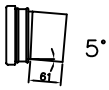

POSITION 1
ORDER REF: 107.35.05

POSITION 2
ORDER REF: F107.35.09

POSITION 3
ORDER REF: 107.35.14

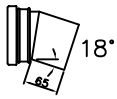

POSITION 4
ORDER REF: F107.35.18

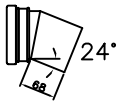

POSITION 5
ORDER REF: 107.35.24

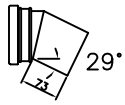

POSITION 6
ORDER REF: F107.35.29

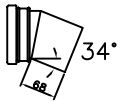

POSITION 7
ORDER REF: 107.35.34

TECHNICAL INFORMATION GIVEN IN GOOD FAITH BUT WITHOUT LIABILITY